Faceplate Blank Module

Part Number: FP-BLANK-XX

XX=Color ALM(Almond), IV(Ivory), WHT(White), LA(Light Almond), BR(Brown), GY(Grey), OW(Office White)

RoHS COMPLIANT

Specification
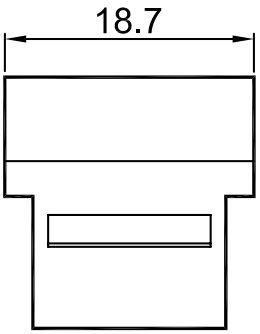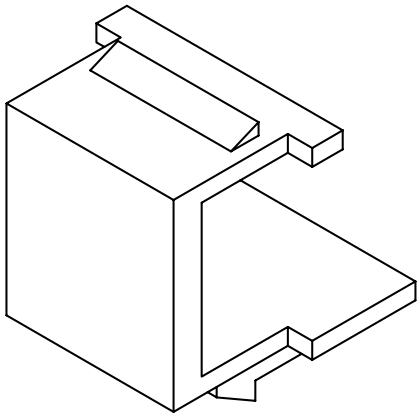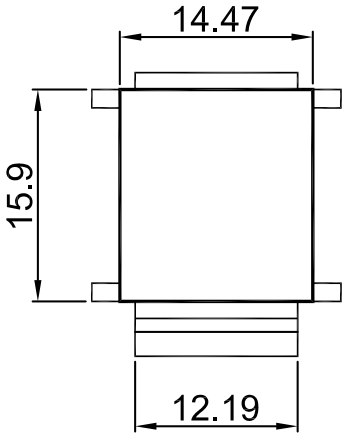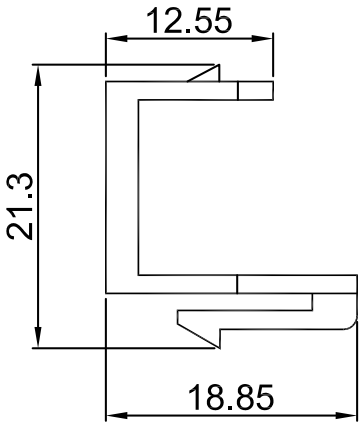
Flammability Rating	UL 94 V-0
Operating Temperature	-10 °C to +60 °C (+14 °F to +140 °F)
Relative Humidity	5%–95%, non-condensing
Storage Temperature	-40 °C to +70 °C (-40 °F to +158 °F)
Material:	ABS UL 94V-0
Material Type:	High-impact, flame retardant, thermoplastic
RoHS 2002/95/EC	
Fills Unused Ports Allowing For Future Upgrades	
Compatible With All comCables Faceplates, Surface Mount Boxes, & Blank Patch Panels